Plug & Seat Valve Assemblies

Features

- Suitable for water or glycol mix
- 1½ million cycle U-cup packing cartridge
- Maintenance free
- High and low Kvs of each size
- All metal movement, no plastic parts

Specification

Valves

Nominal pressure:		
	Screwed	PN25
	Flanged	PN16
Characteristics		eq% ends – linear centre
Connections:		
	Screwed	1” to 2”, BSPT
	Flanged	80mm, DIN 80mm
Medium temperature		0 to 130°C
Turn down		50:1
Materials:		
	Screwed types	Bronze
	Packing	Multiple U-cup EPDM rings
	Scrubbing rings	Viton
	Stem	Mirror finish 303 Stainless steel
	Disk	Bronze
	Seat top	Integral bronze C84400
	Seat bottom	Removable bronze C84400
	Flanged types	Cast Iron
	Packing	Multiple U-cup EPDM rings
	Scrubbing rings	Viton
	Stem	Mirror finish 303 Stainless steel
	Disk	Bronze
Leakage		Class III 0.1% seat leakage

Actuators

Power supply		24Vac @ 50/60Hz
Power consumption:		
	Raise/lower	2.3VA
	Modulating	3.3VA
Pre-cabled connection		18 AWG, 0.9m long
Ambient:		
	Temperature	5 to 55°C
	Humidity	0 to 95% non-condensing
Protection		IP54
Country of origin		Canada

Product Codes

Please see page 2 for product codes

Product Codes

3-Port Plug & Seat Valve Assemblies:

VE-25-5-I	25mm Screwed, k_{vs} 5, 6.8 bar close-off
VE-25-9-I	25mm Screwed, k_{vs} 9.2, 6.8 bar close-off
VE-40-13-I	40mm Screwed, k_{vs} 13.3, 4.6 bar close-off
VE-40-20-I	40mm Screwed, k_{vs} 20, 4.6 bar close-off
VE-50-29-I	50mm Screwed, k_{vs} 29.2, 2.6 bar close-off
VE-50-37-H	50mm Screwed, k_{vs} 37.5, 1.7 bar close-off
Actuators to suit above valve (only)	
VE-5120	24V Raise/lower
VE-5320	24V Modulating

VE-40-13-I	40mm Screwed, k_{vs} 13.3, 6.8 bar close-off
VE-40-20-I	40mm Screwed, k_{vs} 20, 6.8 bar close-off
VE-50-29-I	50mm Screwed, k_{vs} 29.2, 4.7 bar close-off
VE-50-37-H	50mm Screwed, k_{vs} 37.5, 3.0 bar close-off
VE-50-54-I	50mm Screwed, k_{vs} 54.2, 2.04 bar close-off
VE-50-62-H	50mm Screwed, k_{vs} 62.4, 1.02 bar close-off
Actuators to suit above valve (only)	
VE-5130	24V Raise/lower
VE-5330	24V Modulating

VE-50-29-I	50mm Screwed, k_{vs} 29.2, 6.8 bar close-off
VE-50-37-H	50mm Screwed, k_{vs} 37.5, 4.76 bar close-off
VE-80-54-I	80mm Flanged, k_{vs} 54.2, 3.74 bar close-off
VE-80-62-H	80mm Flanged, k_{vs} 62.4, 2.04 bar close-off
VE-80-95-K	80mm Flanged, k_{vs} 95, 1.7 bar close-off
Actuators to suit above valve (only)	
VE-5140	24V Raise/lower
VE-5340	24V Modulating

VE-80-54-I	80mm Flanged, k_{vs} 54.2, 5.1 bar close-off
VE-80-62-H	80mm Flanged, k_{vs} 62.4, 3.74 bar close-off
VE-80-95-K	80mm Flanged, k_{vs} 95, 2.72 bar close-off
Actuators to suit above valve (only)	
VE-5140L	24V Raise/lower
VE-5340L	24V Modulating

VE-80-54-I	80mm Flanged, k_{vs} 54.2, 6.8 bar close-off
VE-80-62-H	80mm Flanged, k_{vs} 62.4, 5.44 bar close-off
VE-80-95-K	80mm Flanged, k_{vs} 95, 4.42 bar close-off
Actuators to suit above valve (only)	
VE-5150	24V Raise/lower
VE-5350	24V Modulating

Product Codes (continued)

3-Port Spring Return Plug & Seat Valve Assemblies:

VE-25-5-I	25mm Screwed, k_{vs} 5, 6.8 bar close-off
VE-25-9-I	25mm Screwed, k_{vs} 9.2, 6.8 bar close-off
VE-40-13-I	40mm Screwed, k_{vs} 13.3, 4.76 bar close-off
VE-40-20-I	40mm Screwed, k_{vs} 20, 4.76 bar close-off
VE-50-29-I	50mm Screwed, k_{vs} 29.2, 3.5 bar close-off
VE-50-37-H	50mm Screwed, k_{vs} 37.5, 2.38 bar close-off
VE-80-54-I	50mm Flanged, k_{vs} 54.2, 2.04 bar close-off
Actuators to suit above valve (only)	
VE-5420	24V Raise/lower
VE-5820	24V Modulating

VE-40-13-I	40mm Screwed, k_{vs} 13.3, 8.5 bar close-off
VE-40-20-I	40mm Screwed, k_{vs} 20, 8.5 bar close-off
VE-50-29-I	50mm Screwed, k_{vs} 29.2, 6.8 bar close-off
VE-50-37-H	50mm Screwed, k_{vs} 37.5, 5.44 bar close-off
VE-80-54-I	80mm Flanged, k_{vs} 54.2, 3.74 bar close-off
VE-80-62-H	80mm Flanged, k_{vs} 62.4, 2.72 bar close-off
VE-80-95-K	80mm Flanged, k_{vs} 95, 1.7 bar close-off
Actuators to suit above valve (only)	
VE-5440	24V Raise/lower
VE-5840	24V Modulating

VE-80-54-K	80mm Flanged, k_{vs} 54.2, 4.42 bar close-off
VE-80-62-K	80mm Flanged, k_{vs} 62.4, 4.42 bar close-off
VE-80-95-K	80mm Flanged, k_{vs} 95, 4.42 bar close-off
Actuators to suit above valve (only)	
VE-6060	24V Raise/lower
VE-6060	24V Modulating

Accessories:

VE-P1	25mm Plug to convert to 2-way valve
VE-P2	40mm Plug to convert to 2-way valve
VE-P3	50mm Plug to convert to 2-way valve
VE-P4	80mm Plug to convert to 2-way valve

Technical Overview

The VE-x range of Plug & Seat valve assemblies are complete with actuators, linkage assembly and valve body. They are suitable for use in heating and chilled applications and with a static pressure rating suitable up to PN25 (screwed) & PN16 (flanged). An optional blanking plug is available to convert the universal 3-way valve body in to a 2 -way valve.

Actuators are available for raise/lower (3-point) and 0-10Vdc modulating control. They also fitted with manual override and position indicators. They can also be fitted with optional auxiliary switches.

Commercial Control Features

The unique universal design of the VE-x series is the cost effective "one piece" heavy bronze valve body and its ability to be used as a 2-way or 3-way valve by closing off the unused ports "A" or "B" (Never "AB"). "Suction-cup" effects will not occur and, because of the unique plug characterisation, good control will be had in both 2 and 3-way formats. (modified equal % to linear. See charts). These specially designed plug shapes incorporate the best features of equal percentage and linear characterization to provide a valve excellent for modulating well at low flow, while adapting to provide linear characterization in the later stages of valve opening. This feature, along with the variable ratio linkage kit, provides better mixing yet no mid-range starvation, (common with most 3-way equal percentage valves). This allows for improved throttling action in 2-way duty. A unique trouble-shooting feature, a raised marker at the top of the bonnet, clearly defines port "A" after the insulation (lagging) has been installed.

Industrial Control Valve Features

For industrial applications these valves suffice well, incorporating features such as both bottom and top stem guides for quieter, vibration-free performance, stainless steel and low zinc components for years of corrosion free service life, and tapping points at all ports for test gauges, temperature probes, pressure taps, etc. (tapped to 1/8" NPT or BSPT to order).

Suitable Fluids

These valves are recommended for use with hot and chilled water or glycol mix.

Benefits

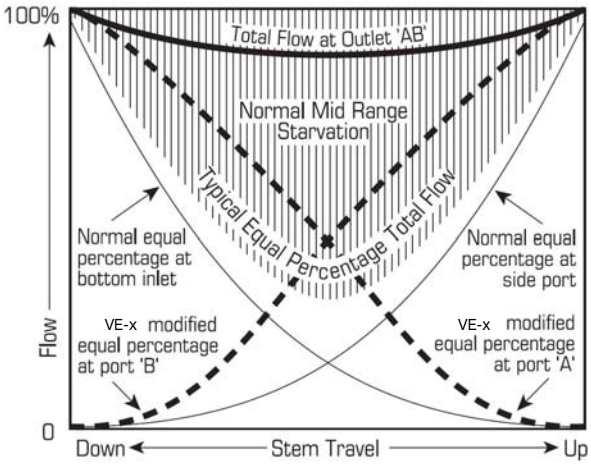

Modified equal % to linear flow characteristics allows for precise control in two way valves and no mid range starvation in three way valves.

Installation

Mixing valves must always be used with the flow leaving the common AB port. They must always be installed on the return, or leaving, side of the coil. The application is to be diverting the water in the “T” through or around the coil. The water mixes in the valve from the coil or bypass to go back to the system. These valves can be piped in two different configurations, all achieving the same outcome. When the stem of the valve is up, the flow is from Port B to Port AB. When the stem travels down, Port A starts to open and Port B starts to close.

Reversing the Stem Travel
Non-spring return actuators rotation can be reversed by a switch located on the actuator Spring Return Actuators, in most cases, have to be rotated by removing the actuator from the linkage. Once removed, flip the actuator to change the rotation of the spring.

Installation (continued)

1/ Spring Stem Up
Flow is bypassing the coil
* Reverse the actuator rotation to spring stem down to have flow through the coil

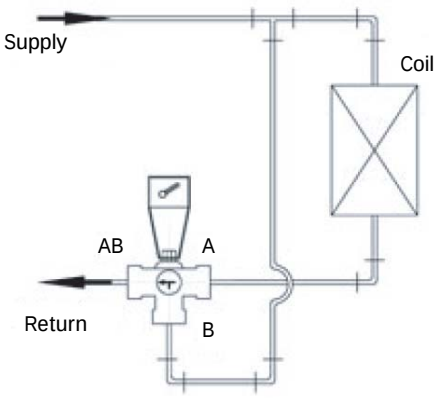

2/ Spring Stem Up -
Flow is through the coil
* Reverse the actuator rotation to spring stem down to have the flow bypass the coil

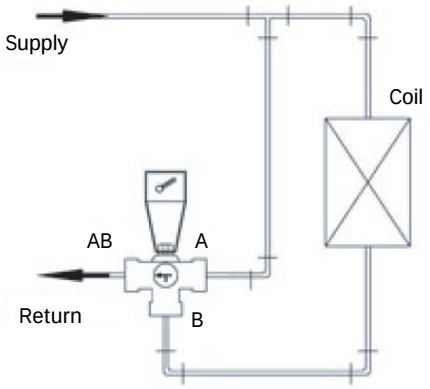

IMPORTANT:
Install in upright position or at a maximum angle of 45°.
DO NOT INSTALL HORIZONTALLY as this may limit the life expectancy of the packing.

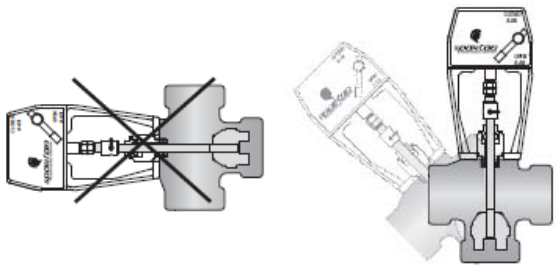

Installation (continued)

Observe flow direction as indicated on valve body.
Globe valves or lift-and-lay valves are designed for flow in one specific direction only, that is, the liquid forcing the plug off the seat. In the stem down position the flow is from A to AB, in the stem up position the flow is from B to AB. If used with the flow going backwards, the water forces the plug to slam against its seat. Slamming and/or water hammer may then be apparent.

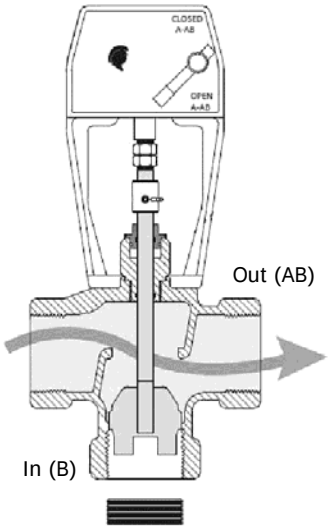

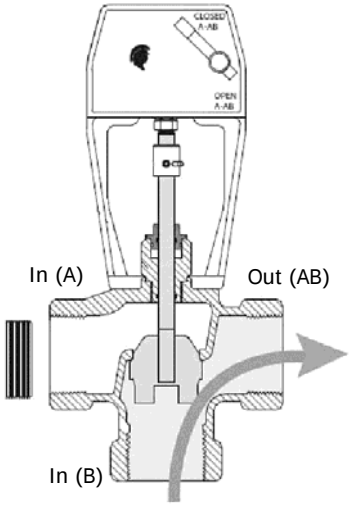

To convert the 3-way valve body into 2-way (either straight or angle), plug bottom port B or side port A with optional plug (see page 2 for part codes).

Valve Actuators

Actuators are available for raise/lower (3-point) and 0-10Vdc modulating control. Power supply voltage is 24Vac 50/60Hz on all models.

Modulating actuators are supplied with a 0-10Vdc feedback to transmit the position of the actuator for use in external control loops or position indication.

All incorporate override lever/position indicators. The heavy duty steel linkage movement provides a robust, variable ratio motion which provides more force at the ends of travel for seating the valve extra tightly. The same variable ratio assists in the valve characteristics to improve modulating control.

Connections

Connections are made via a 0.9 meter cable:

Raise/Lower

Red	24Vac
Violet	Signal clockwise
Orange	Signal counter clockwise

Modulating (0-10Vdc)

Red	24Vac
Black	Neutral
Grey	0-10Vdc Input signal
Pink	0-10Vdc Feedback signal

Dimensions

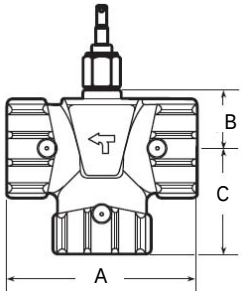

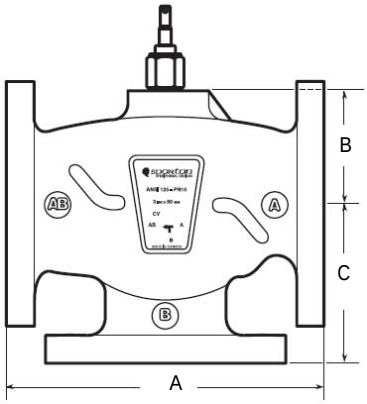

	A	B	C	Weight
	(mm)	(mm)	(mm)	(kg)
VE-25-x	125	30	69	0.9
VE-40-x	140	38	77	1.8
VE-50-x	152	39	84	2.7
VE-80-x	250	91	124	21.6

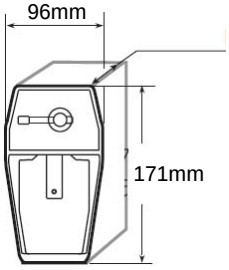

Weight: 0.45kg

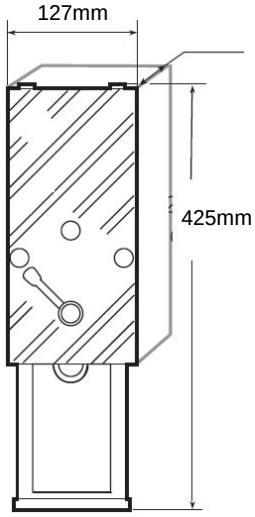

4.5kg